St. Paul Park, Minnesota...It's the place to be!

And it's all about community and keeping the dream alive!

2016 FOOD VENDOR APPLICATION

Participant Guidelines and Requirements

Plans for the 2016 St. Paul Park Heritage Days Festival are going strong and we would like to invite you to participate in this years' concessions at the festival! The Festival will be held on Broadway Avenue in downtown St. Paul Park on August 19 - 21, 2016.

ELIGIBILITY

All local food vendors must have a valid Minnesota State Tax Identification Number. If you do not have one, one may be applied for by calling Minnesota Sales Tax and Excise Division at 800.657.3777 or 651.296.6181. All food vendors must collect and pay taxes on each taxable sale made at the Heritage Days Festival. **A Minnesota Form ST-19 must be completed and returned with your application fee before any sales can be made.** The Heritage Days Festival reserves the right to jury entries and to ask a vendor to leave the Festival should their behavior be deemed inappropriate by the Festival Committee. The Heritage Days Festival Staff reserves the right to refuse or stop sales or give away of products before or during the Festival, which it deems inappropriate to the Festival

FOOD LICENSE

All participants who are providing or selling food at the event are required to have a Special Event Food Stand License from the Washington County Department of Public Health, Minnesota Department of Health Mobile Food Unit, Minnesota Department of Agriculture Food License or have a Seasonal Temporary Food Stand. A Health Inspector will be at the event to inspect all vendors. **A copy of your Special Event Food Stand License MUST accompany this application and you must have your license posted at time of service**. No one providing or selling food will be allowed to participate without a Special Event Food License. For your convenience, we have attached a Special Event License Application. If you have any questions about obtaining a license, contact Eric Jensen at 651.430.4044 or by e-mail at eric.jensen@co.washington.mn.us

LOCAL FOOD ESTABLISHMENTS WITH EXISTING FOOD LICENSE

If you currently have a permanent food license issued through any of the departments mentioned above, you are allowed to sell food under your current license three (3) times per year. Although you are licensed, you are REQUIRED TO FOLLOW AND COMPLETE the Minnesota State Special Event License standards and all guidelines. If these standards and guidelines are not followed, you will be shut down by the Health Inspector. Therefore, please read through all of the enclosed information to make your food booth successful!

FOOD VENDOR SPACE

The Heritage Days Festival will allot space for each vendor in the designated area that has been deemed appropriate. Space will be reserved on a first come, first served basis. Payment of the application fee must accompany each application in order to reserve a space. Applicant must supply their own power, electrical cords, tents, tables, chairs, cleanup, safety rope, lighting, etc. Generators or other portable power supply units may need to be inspected by the State Electrical Inspector. It is the vendor's responsibility to contact the Electrical Inspector, William Dietrich at 651.493.1599 to arrange for an inspection, if required. A brochure from the Minnesota State Board of Electricity is attached. Each vendor is responsible for his/her equipment and the security there of while involved in St. Paul Park Heritage Days. We will not be liable for anything which may happen to equipment. Each vendor is responsible for clean-up of their assigned area daily and shall provide a minimum of one trash container.

FOOD VENDOR HOURS

Events on Broadway will run from 8:00 a.m. to 10:00 p.m. on Saturday, August 20th and from 8:00 a.m. to 5:00 p.m. on Sunday, August 21st. Vendors will have the opportunity to be part of the St. Paul Park Heritage Days Festival which is a free event to the public on both Saturday and Sunday. Live music will begin on Saturday afternoon from 6:00 p.m. to 10:00 p.m.(or TBD) Vendors must have their area torn down by 11:00 p.m. on Saturday when the street reopens and 6:00 p.m. on Sunday. **SETUP BEGINS AT 7:00 A.M. AND MUST BE DONE BY 9:00 A.M. ON SATURDAY, AUGUST 15TH DUE TO THE PARADE.**

INSURANCE

Vendors must provide a Certificate of Insurance with Liability Limits of at least $500,000 with application. The effective dates of your policy must cover the dates of the event. Insurance certificate must list the following entities as "additional insured": City of St. Paul Park, 600 Portland Avenue, St. Paul Park, MN 55071 and St. Paul Park/Newport Lions Club, P.O. Box 262, Newport, MN 55055

INDEMNITY

To the extent permitted by law, all vendors agree to protect, indemnify, defend and hold harmless, the St. Paul Park/Newport Lions Club, the City of St. Paul Park and their respective volunteer staff against all claims, losses, damages to persons or property and costs (including Attorney's Fees), arising out of and/or connected with the event, including but not limited to, the installation, removal, maintenance, occupancy and/or use of city premises and/or a part thereof.

WARRANTIES

While the Committee of the St. Paul Park Heritage Days Festival will make every effort to produce a successful Festival, they cannot warrant the level of attendance, weather conditions, sales and/or any circumstances beyond their control.

Please direct any questions you may have to Arlo Arlandson at 612.810.1256 or via email at earlands@gmail.com

St. Paul Park Heritage Days Festival

2016 FOOD VENDORS APPLICATION

August 20, 2016 8:00 a.m. - 10:00 p.m.
August 21, 2016 8:00 a.m. - 5:00 p.m.

Please complete the vendor information and mail the completed application with required fee and documentation to the address listed.

BUSINESS/ORGANIZATION NAME:_____

Contact Person:_____**Phone #:**_____

Email Address:_____**Fax #:**_____

Address:_____

City:_____**State:**_____**Zip:**_____

LIST THE FOODS WHICH YOU PLAN ON SELLING AT THE HERITAGE DAYS FESTIVAL (REQUIRED): Include everything (all food and beverages, etc.) that you plan on selling at your booth/stand

_____

_____

_____

SPACE SIZE REQUIREMENTS AND FEES: Fees are non-refundable. All Non-Profit organizations must provide proof of status.

___10 x 10	$250	$75 Non-Profit	___10 x 20	$300	100 Non-Profit
___10 x 30	$350	$125 Non-Profit	___10 x 40	$400	$150 Non-Profit

BY SIGNING BELOW, YOU ARE STATING YOU HAVE READ THE PARTICIPANTS GUIDELINES AND REQUIREMENTS AND ACCEPT THESE RULES:

Name of Business/Organization:_____Title:_____

Authorized Signer:_____Date:_____

RETURN YOUR COMPLETED APPLICATION BY JULY 27, 2016. IN ORDER FOR YOUR APPLICATION TO BE CONSIDERED COMPLETE, IT MUST INCLUDE ALL ITEMS LISTED BELOW:

- ☐ Signed and Completed Application
- ☐ Copy of Non-Profit Status
- ☐ Copy of Special Event Food Stand License
- ☐ Certificate of Liability Insurance
- ☐ ST-19 Form (All vendors must include this form)
- ☐ Check - **Payable to St. Paul Park/Newport Lions Club**
- ☐ Mail to: City of St. Paul Park - Heritage Days, Attn: Food Vendors, 600 Portland Avenue, St. Paul Park, MN 55071

For more information, please contact Arlo Arlandson at 612.810.1256 or via email at earlands@gmail.com

MINNESOTA · REVENUE

ST19

Operator Certificate of Compliance

Read the information on the back before completing this certificate. **Person selling at event:** Complete this certificate and give it to the operator/organizer of the event. **Operator/organizer of event:** Keep this certificate for your records.

Do not send this form to the Department of Revenue.

Print or type

Name of business selling or exhibiting at event | Minnesota tax ID number

Seller's complete address | City | State | Zip code

Name of person or group organizing event

Name and location of event

Date(s) of event

Merchandise sold

Describe the type of merchandise you plan to sell.

Sales tax exemption information

Complete this section if you are not required to have a Minnesota tax ID number.

☐ I am selling only nontaxable items.

☐ I am not making any sales at the event.

☐ I participate in a direct selling plan, selling for_____ *(name of company),* and the home office or top distributor has a Minnesota tax ID number and remits the sales tax on my behalf.

☐ This is a nonprofit organization that meets the exemption requirements described below:

_____ Candy sold for fundraising purposes by a nonprofit organization that provides educational and social activities for young people primarily aged 18 and under *(MS 297A.70, subd. 13[a][4]).*

_____ Youth or senior citizen group with fundraising receipts up to $20,000 per year ($10,000 or less before January 1, 2015)*(MS 297A.70, subd. 13[b][1]).*

_____ A nonprofit organization that meets all the criteria set forth in MS 297A.70, subd. 14.

Sign here

I declare that the information on this certificate is true and correct to the best of my knowledge and belief and that I am authorized to sign this form.

Signature of seller | Print name here

Date | Daytime phone ( )

PENALTY — Operators who do not have Form ST19 or a similar written document from sellers can be fined a penalty of $100 for each seller that is not in compliance for each day of the selling event.

Information for sellers and event operators

Operators/organizers of craft, antique, coin, stamp or comic book shows; flea markets; convention exhibit areas; or similar events are required by Minnesota law to get written evidence that persons who do business at the show or event have a valid Minnesota tax ID number.

If a seller is not required to have a Minnesota tax ID number, the seller must give the operator a written statement that items offered for sale are not subject to sales tax.

All operators (including operators of community sponsored events and nonprofit organizations) must obtain written evidence from sellers.

Certain individual sellers are not required to register to collect sales tax if they qualify for the isolated and occasional sales exemption. To qualify, all the following conditions must be met:

- The seller participates in only one event per calendar year that lasts no more than three days;
- The seller makes sales of $500 or less during the calendar year; and
- The seller provides a written statement to that effect, and includes the seller's name, address and telephone number.

This isolated and occasional sales provision applies to individuals only. It does not apply to businesses.

Sales tax registration

To register for a Minnesota tax ID number, call 651-282-5225.

A registration application (Form ABR) is also available on our website at **www.revenue.state.mn.us**.

Information and assistance

If you have questions or want fact sheets on specific sales tax topics, call 651-296-6181.

Most sales tax forms and fact sheets are also available on our website at **www.revenue.state.mn.us**.

For information related to sellers and event operators, see Fact Sheet #148, *Selling Event Exhibitors and Operators.*

We'll provide information in other formats upon request to persons with disabilities.

AN OVERVIEW OF ELECTRICAL CODE REQUIREMENTS

Article 525 of the National Electrical Code covers the installation of portable wiring and equipment for carnivals, circuses, exhibitions, fairs, traveling attractions, and similar functions, including wiring in or on all structures.

It is the responsibility of each exhibitor or user of electrical equipment to make arrangements for an electrical inspection.

110.3 Electrical Equipment. All electrical equipment shall be listed and labeled. Equipment shall be installed and used in accordance with that listing. Damaged or defective electrical equipment shall be repaired or replaced.

525.21 Disconnecting Means. A means to disconnect each portable structure from all ungrounded conductors shall be provided. The switch shall consist of no more than six enclosed switches or circuit breakers and shall located within sight of and within 6 feet of the operator's station. Fuse-holders with switches mounted on box covers and switch controlled multi-outlet strips are not acceptable as the required disconnecting means. Enclosures for disconnect switches and circuit breakers installed outdoors must be rainproof unless otherwise protected from the weather by location. Where accessible to unqualified persons, the disconnecting means shall be lockable.

525.20 Portable Cords. Portable cords shall be size 12 or larger Type G, PPE, S, SE, SEO, SEOO, SC, SCE, SCT, SO, SOO, ST, STO, STOO, W or other types identified for extra-hard usage, and must be of the grounding type. The cord type is printed or embossed on approved cords. Two-wire cords are not allowed. Cables with a "J" in the type designation (such as Type SJT) are junior-hard-service rated and are not permitted where subject to physical damage. When used outdoors, cords shall be listed for wet locations and be sunlight resistant, unless they are an integral part of listed portable equipment. All cords shall be continuous and contain no splices. Repair of the cord outer jacket only may be done with heavy-wall heat-shrink tubing with proper adhesive or by a vulcanizing process.

525.6 Mechanical Protection. Wiring in and on rides, concessions and other units shall be provided with mechanical protection where subject to physical damage. Flexible cords and cables run on the ground shall be approved for extra-hard usage and shall be routed and arranged to minimize the tripping hazard. Cords and cables may be covered with approved non-conductive mats. Mats shall be self-weighted to minimize movement and drape over cords and cables.

525.13 Electrical Wiring. All permanent wiring installed on or within a structure or concession trailer shall be an approved wiring method installed according to the requirements of the National Electrical Code. Wiring for an amusement ride, attraction, tent, or similar structure shall not be supported by any other ride or structure. Hollow framing spaces within a structure shall not be used as a raceway or as an enclosure for electrical equipment.

240.20 & 240.22 Overcurrent Protective Devices. Motors and lighting circuits shall have separate fuses or circuit breakers. Lighting circuits shall be protected at no more than 20 amperes. Motors shall be protected at not over 125% of full load current or shall be thermally protected. All cords, cables and equipment must be protected from overcurrent by properly sized fuses or circuit breakers.

525.31 Equipment Grounding. Equipment grounding conductors shall be run with all feeders and branch circuits. Exposed metal parts of electrical equipment shall be bonded, and if cord connected, the cord shall have a grounding conductor and grounding type attachment plug. Equipment that is listed and labeled as double insulated is permitted. All grounding conductors in an enclosure shall terminate in a common grounding bus or lugs. The equipment grounding bar or lug(s) shall be secured to the electrical enclosure with screws or bolts used for no other purpose. Approved means shall be used to connect equipment grounding conductors to enclosures. Equipment grounding conductors shall be isolated from grounded circuit conductors.

525.11 Multiple Sources of Supply. Where multiple separately derived systems or services or both supply rides, games, attractions or other structures that are separated by less than 12 feet, all sources shall be bonded to the same grounding electrode system.

525.23 Ground-Fault Circuit-Interrupter Protection. All 125-volt, single phase, 15- and 20-ampere receptacle outlets that are in use by personnel or readily accessible to the general public shall have listed GFCI protection. Manufactured cord sets incorporating listed ground-fault circuit-interrupter protection for personnel shall be permitted. Egress lighting shall not be connected to the load side of a ground-fault circuit-interrupter device.

525.3 Attractions Using Contained Volumes of Water. Attractions utilizing pools, fountains and similar installations with contained volumes of water shall be installed per applicable the requirements of NEC Article 680.

525.3 Audio Signal and Amplification Equipment. The requirements of NEC Article 640 shall apply to the wiring and installation of audio signal processing, amplification and reproduction equipment.

525.21 Portable Wiring Inside Tents. Wiring for temporary lighting, where installed inside tents and concessions, shall be securely installed and shall be protected from accidental breakage by a suitable fixture or lamp-holder with a guard. Overhead lighting may be installed with approved Type SO cord sets. Festoon lighting or cord sets shall be installed at least 10 feet above ground where accessible to the public.

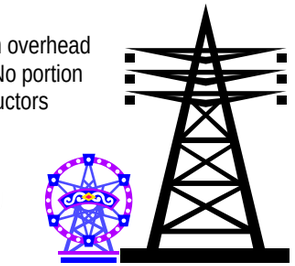

525.5 Overhead Clearances. A clearance of 15 feet in any direction shall be maintained from overhead conductors operating at 600 volts or less and any portion of an amusement ride or attraction. No portion of an amusement ride or attraction may be located under or within 15 feet horizontally of conductors operating at over 600 volts.

525.22 Receptacles. Receptacle outlets shall have the proper rating for the circuit amperes, voltage, and number of phases. All receptacles shall be grounded by an equipment grounding conductor installed with the circuit conductors. Unless otherwise protected from the weather, receptacles and switches used outdoors must have weatherproof covers. The grounding prong shall only be used for grounding. Cord and cable plugs and receptacles shall not lie on the ground. Where single-pole separable connectors are used, they shall comply with 530.22.

445.13 Generators. Generators or other power supply units and the associated electrical distribution cords and panelboards must be inspected at each engagement during the season. The conductors from the generator terminals to the first overcurrent device shall not be less than 115 percent of the nameplate rating of the generator. To establish ground, the neutral terminal in the service equipment, transformer truck, or generator shall be connected to an approved grounding electrode system with a stranded copper grounding electrode conductor sized not smaller than 4 AWG. This conductor shall be installed without splice from the grounding terminal to the grounding electrode shall be connected with approved clamps.

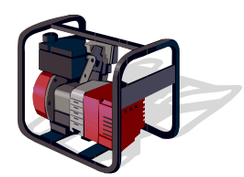

Generators that supply only loads connected directly to receptacle outlets mounted on the generator and where the equipment grounding terminals of the receptacles are bonded to the generator frame shall not be required to be connected to a grounding electrode system. All 125-volt, single phase, 15- and 20-ampere receptacles shall be GFCI-protected.

NOTE: This information is not intended to be your only electrical information resource. Additional information and knowledge are necessary for an electrical installation that complies with the National Electrical Code and is free from fire and electric shock hazards.

FREQUENTLY ASKED QUESTIONS

1. What is the responsibility of the Department of Labor & Industry?
The Department has the responsibility for inspection of all electrical wiring and equipment for transient events such as carnivals, circuses, festivals, production sites and road construction projects. Portable generators and distribution shall be inspected at each setup. Each ride, concession or similar unit shall be inspected at or before its initial operation each season. Equipment shall be in compliance before it is energized and put into use.

2. What is the responsibility of the user?
Users of portable power systems are responsible for notifying the department or the inspector sufficiently in advance to permit completion of the inspection, the correction of code violations, and re-inspection if necessary.

3. Is inspection of equipment necessary before the unit can be energized or used?
Equipment shall not be energized until it has been inspected and approved.

4. Does the Department of Labor & Industry perform electrical inspections in all areas of the state?
Our inspectors make electrical inspections statewide, except in cities that have made provisions electrical inspections within their jurisdiction. A list of all electrical inspectors and contact information is available at the website, www.electricity.state.mn.us.

5. How do I request an electrical inspection?
The request for electrical inspection form is completed and the appropriate inspection fee collected at the time of the inspection.

6. Do I need an inspection every year?
An initial inspection is required at or before the first setup each season. Portable generators with distribution shall be inspected at each setup.

7. Can the inspection be requested and made before the first appearance of the season?
Inspections of concession trailers can be arranged in advance by contacting the local inspector directly or the Department of Labor & Industry. Inspections can be made at any mutually agreeable time and location.

8. What if there are code violations?
Identified code violations are documented on an inspection report form and a copy is provided to the user of the equipment. Equipment shall be in compliance before it is energized and put into use.

9. Are there restrictions about who can do electrical work?

The installation, repair and correction of code violations of all on-site electrical wiring shall be done by licensed electrical contractors. Owners are not allowed to do any electrical wiring once the equipment is on-site. Persons other than licensed employees of electrical contractors are limited to plugging portable equipment into receptacle outlets.

10. How is the equipment marked to indicate that it has passed inspection?
When equipment is in compliance, an inspection sticker is placed on the equipment with the date of inspection and the inspection number. The owner's copy of the inspection form is another record of compliance, which should be kept with the equipment for the remainder of the season.

11. Are special inspections required for amusement rides?
Amusement rides must be inspected by a level II or III AIMS or NAARSO certified amusement ride inspector in the same calendar year and prior to July 1st or the first operation in Minnesota, whichever is later.

12. How much does an electrical inspection cost?
The inspection fee for each generator or source of supply is:

0 to 400 amp capacity	$35
401 to 800 amp capacity	$60
Above 800 amp capacity	$100

In addition to the generator inspection, there shall be an inspection of all feeders and distribution equipment at each setup. This fee is at the $80 hourly rate with a one-hour minimum charge.

The inspection fee for each amusement ride, device, concession, attraction, or similar unit with a supply up to and including 60 amperes is $35.

The fee for inspection of a unit with a supply over 60 amperes is $40.

In addition to the above fees, inspections made on Saturdays, Sundays, holidays, or after regular business hours will be charged at the $80 hourly rate with a one-hour minimum charge.

If re-inspection of corrections is necessary, there is a $35 charge for each re-inspection.

Inspection fees must be paid by check.
Cash and credit cards are not accepted.

This diagram shows an example of an acceptable disconnecting switch for a typical concession unit.

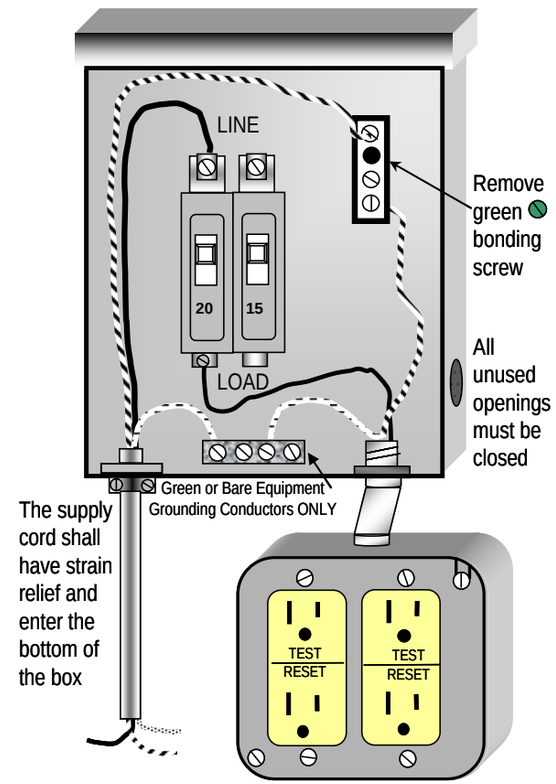

The disconnect may be permanently installed within a concession stand or mounted to a portable backboard.
The disconnect switch must be mounted in the upright position and shall be rainproof if exposed to weather.
The 120 volt, 15 and 20 amp receptacles must have ground-fault circuit-interrupter protection for personnel.

MINNESOTA DEPARTMENT OF
LABOR & INDUSTRY

www.electricity.state.mn.us

Requirements for Portable & Temporary Electrical Power Distribution

This brochure contains important information regarding electrical licensing, electrical inspection, and the requirements of the National Electrical Code for carnivals, circuses, fairs, festivals, and similar transient projects that employ portable or temporary electrical power distribution.

443 Lafayette Road North
Saint Paul, Minnesota 55155-4342
Voice 651-284-5026
Fax 651-284-5749
TTY 651-297-4198
Toll Free 1-800-DIAL-DLI
800-342-5354

Department of Public Health & Environment
14949 62nd Street North · PO Box 6 · Stillwater MN 55082-0006
Phone 651-430-6655 · Fax 651-430-6730
www.co.washington.mn.us

2016 Special Event Application

Applicant Information

Food Stand Name:		
Name:		
Address:		Phone:
City:	State:	Zip:
Email:		Alt Phone:
Person In Charge at Event:		Phone:

Event

Name of Event:		Date & Time **Stand** Open: Date(s) Time(s)
Stand Location:		_____ _____
Location of Event:		_____ _____
Address of Event:		_____ _____
City, State, Zip:		_____ _____
Event Coordinator: *if applicable*	Phone:	_____ _____
		_____ _____
		_____ _____

License Category & Fee Schedule

Special event food stand means a food and beverage service establishment which is used in conjunction with celebrations and special events, and which operates no more than three times annually for no more than ten total days.

_____	**Food Establishment**	Day One of Event	**$79.00**	$_____
_____	**Food Establishment**	# of Additional Days_____	**$26.00** Per Additional Day	$_____
_____	**Non-Profit Establishment**	Penalty Fees for Late Application Apply. **Must Present Proof of Non-Profit Status.**	**$0.00** Per Event	$_____
_____	**Beverage Only**	**No On-Site Preparation** (Such as Blending or Cutting)	**$46.00** Per Event	$_____
_____	**Penalty Fee for Late Application**	Less Than 14 Days But More than 2 Days Before the Event	**$10.00** **-OR-**	$_____
_____	**Penalty Fee for Late Application**	Two Calendar Days or Less Before Event	**$30.00**	$_____
		Total Fees	**$**_____	

Washington County Accepts Cash, Checks and Credit Cards (Visa, MasterCard & Discover)
To Pay by Credit Card, please contact 651-430-6655.

Application approval and a posted license are required for all of the above categories, including non-profit establishments.

_____ _____
Applicant Signature *Date*

Handwashing

Handwashing facilities are required. Chose one of the following methods:

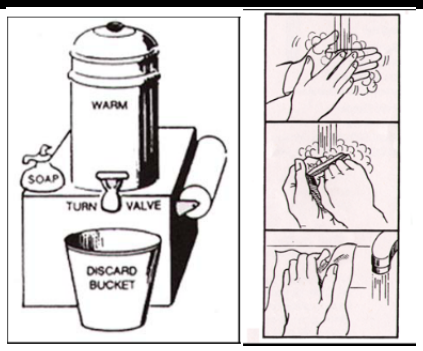

_____ Gravity device supplied with running water and a faucet, soap, paper towels and a nail brush.

_____ Sink available IN STAND with running water, soap, paper towels and a nail brush.

How will you minimize direct hand contact with ready-to-eat foods?

Water Supply & Waste Water

Water supply may not come from a residential well. It must be obtained from an approved public water supply system. Water can NOT be supplied through a garden hose. Water must be supplied with a food-grade hose that is approve for drinking purposes. The hose must be flushed and sanitized before use. The water inlet must be protected from contamination and designed so a non-potable service connection cannot be made. Waste water shall be discharged into a sanitary sewer system or approved septic system. Disposal by throwing or dumping the waste water on the ground or storm sewer is NOT permitted.

What is the source of water supply for the event?

What is the method of disposal for waste water at the event?

Food/Beverages Served

List all items on menu. Identify source, for example, name of grocery store. Home prepared foods are NOT permitted. Attach additional sheet if more space is necessary. Attach menu if available.

	Source:
	Source:
	Source:
	Source:
	Source:
	Source:
	Source:

Food preparation, such as washing or cutting of produce, is NOT permitted on-site and must be done in a licensed or approved facility such as a restaurant, school or church.

When and where will food be prepared?

How will food be transported?

Food & Beverages Served Continued

COLD HOLDING EQUIPMENT: (List and Describe) *Potentially hazardous food must be held and delivered at 41°F or less. Mechanical refrigeration is required for events longer than 4 hours. Dry ice/blue ice may be used for events shorter than 4 hours.*

_____

_____

COOKING EQUIPMENT: (List and Describe) *Potentially hazardous foods must be cooked to a minimum internal temperature of: Fish 145°F, Beef/Pork 155°F or Poultry 165°F. A thermometer must be available to verify temperatures.*

_____

HOT HOLDING EQUIPMENT: (List and Describe) *Hot, potentially hazardous foods must be cooked to proper temperature and held at 140°F or above. Crock pots are prohibited for cooking and/or hot holding. A thermometer must be available to verify temperatures.*

_____

_____

Warewashing

Only single service, disposable eating and drinking utensils may be used unless approved permanent dishwashing facilities are available. Provide three basins for utensil washing. The procedure for manual utensil washing is:

WASH	**RINSE**	**SANITIZE** at least one minute in sanitizing solution	**AIR DRY**
in warm soapy water	in clear water		towel drying is prohibited

Chose one of the following warewashing methods:

_____ Three (3) Bucket System

_____ Three (3) Compartment Sink located IN-STAND

General Materials

HAIR RESTRAINTS: (List and Describe)

SANITIZER BUCKETS: (List and Describe)

TOILET FACILITIES: (Location)

FLOOR and CEILING: (List and Describe)

Applicant Signature

Based on the information provided herein, I understand that a temporary food license is required for this event. I further understand that my application will be considered only for the food and beverages specified. The **DEPARTMENT** must be advised of any deviations or changes to the menu.

Applicant Signature | Date

Please Do Not Write Below This Line

FOR OFFICE USE ONLY

This application is approved only for the operation as specified above. Additional approval is required for any deviations.

Environmental Health Specialist | Date

Department Of Public Health and Environment
GOVERNMENT CENTER
14949 62nd Street North, PO Box 6, Stillwater MN 55082-0006
Office (651) 430-6655 TTY (651)439-6246 Facsimile Machine (651) 430-6730

WASHINGTON COUNTY
SPECIAL EVENT LICENSE STANDARDS

All special event food service operations are to be in compliance with the following standards as well as the Washington County Standards for Special Event Stands. You will be responsible for all applicable requirements.

The license holder is responsible for informing every employee about these guidelines and insuring that employees follow them.

1. All potentially hazardous foods, other than a working supply, must be stored in mechanical refrigeration. Potentially hazardous foods include: hamburgers, pasta, chicken and cooked vegetables.

2. A working supply of potentially hazardous food may be stored in insulated chests with dry ice or cold packs (not ice cubes) for 4 hours or less.

3. Store cold potentially hazardous food in mechanical refrigeration at 41°F or less. Coolers must be operating at 41°F or less before food is placed inside.

4. Provide a thermometer for each refrigerator.

5. Store cooked potentially hazardous food at 140°F or higher in an approved hot holding unit. *Chafing dishes with sterno fuel are not recommended for outdoor events.*

6. Do not thaw frozen potentially hazardous foods at room temperature.

7. Provide a food product thermometer that ranges from 0°F to 220°F.

8. Provide a gravity device supplied with running water and a faucet, soap and paper towels. Wash hands often and thoroughly with soap and hot water.

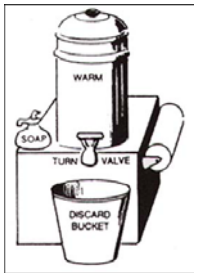

9. Provide sanitizer for all work surfaces and equipment. If wiping cloth is used, provide a sanitizer

bucket to store the cloth.

10. Provide 3 containers for washing, rinsing and sanitizing all dishes and equipment.

    A. Wash in warm soapy water
    B. Rinse in clear water
    C. Sanitize for at least 30 seconds in sanitizer water.
    D. Allow to air dry.

WASH in warm soapy water	**RINSE** in clear water	**SANITIZE** at least one minute in sanitizing solution	**AIR DRY** towel drying is prohibited

11. All ice and food supplies shall come from an approved commercial source. No home prepared food. Only limited food preparation on site is allowed.

12. Wear an effective hair restraint and apron.

13. Store all food, beverages and utensils off the ground to facilitate housekeeping and pest control.

14. Store all chemicals separate from or below food and utensils.

15. Do not smoke, eat or drink in the food preparation area.

16. Discharge waste water into an approved sanitary sewer system or a holding tank. Disposal by throwing water on the ground is not permitted.

EQUIPMENT ITEMS YOU MAY NEED:

1. Cooking equipment
2. Hot holding unit (140°F or higher)
3. Cooler (41°F or lower) unit
4. Dry Ice/Blue Ice
5. Insulated coleman/igloo cooler
6. 3 buckets (soap and water, clean water, bleach water)
7. Sanitizer bucket or spray bottle (bleach and water)
8. Hand washing device with running water, paper towels and hand soap
9. Food product thermometer
10. Cooler/freezer thermometer
11. Test papers
12. Bleach or another approved sanitizer (Quat).
13. Hair restraints
14. Aprons/uniforms

Washington County

Department Of Public Health and Environment

14949 62nd Street North •PO Box 6 • Stillwater MN 55082-0006

Office (651) 430-6655 • TTY (651) 439-6246 • Fax (651) 430-6730

2016

Standards For A Special Event Food Stand Operation

The Special Event Food Stand standards apply to temporary food service concessions operating in conjunction with a special event, such as a carnival or city celebration. A Special Event Food Stand can operate no more than three times annually for no more than a total of ten days each year. A separate license is required for each event and location.

The standards listed below do not apply to Mobile Food Units. A Mobile Food Unit is defined as a vehicle-mounted unit that is either motorized or trailered, and readily movable without disassembling for transport to another location. For Mobile Food Unit requirements, contact the Department of Public Health & Environment at 651-430-6655.

A license must be obtained from the Washington County Department of Public Health and Environment at least fourteen days before a stand is to be put into service. Contact the Department at 651-430-6655 for information on obtaining a County Food License or download the application at www.co.washington.mn.us.

The Department of Public Health and Environment has the authority to restrict the type of food served or the method of food preparation based on equipment limitations or climatic conditions. The Department may close a food service operation if the inspector deems it necessary to protect the public's health.

MN Rule 4626 sets the standard for all food service operations, including Special Event Food Stands. The standards listed below are the important parts of the rule that apply to Special Event Food Stands.

A. PERSONNEL

1. There shall be a person in charge present during all hours of food preparation and service. The person in charge must be able to demonstrate knowledge of foodborne disease prevention, including required food temperatures, proper personal hygiene, correct utensil washing procedures, and correct sanitizer concentrations.

2. Employees shall maintain their hands in a clean, sanitary condition and wash hands immediately after going to the toilet, handling raw food, eating, smoking, or otherwise soiling their hands.

3. No employee may engage in food preparation or service activities if that person has a communicable disease, gastrointestinal illness, sore throat or discharging wound.

4. No tobacco use in any form while on duty.

5. Eating is not permitted while in the food stand. If a beverage is consumed, it must be in a closed container with a straw and stored away from food, beverages and preparation surfaces.

6. An employee's outer garments shall be clean and effective hair restraints (hairnets, caps, etc.) shall be worn by all people in food preparation and service.

7. An adult shall be responsible for the operation and shall supervise children working in the stand.

B. HANDWASHING

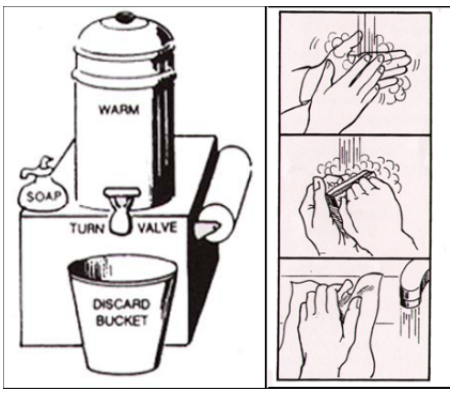

1. Handwashing facilities shall be provided within the stand and must consist of one of the following:
   a. A handwash sink with running water at a temperature between 70°F and 110°F.
   b. A device supplied with running water at a temperature between 70°F and 110°F where water is supplied by gravity to a faucet or spigot.
2. Facilities must provide soap, nail brush, and paper towels.

C. FOOD, BEVERAGE AND UTENSIL HANDLING AND STORAGE

1. All ice and food supplies shall come from an approved commercial source. **Food may NOT be prepared or stored in a home.** Food preparation activities must take place in a licensed kitchen.

2. a. Potentially hazardous cold food shall be maintained **below 41° F**. Potentially hazardous cold food items not being maintained with dry ice or cold packs must be labeled with the date and time that the food was removed from the mechanical refrigeration unit and the time that it is to be discarded (no more than four hours). Items maintained with dry ice or cold packs must be discarded after four hours.
   b. Potentially hazardous hot food shall be maintained above **140°F.** If previously cooked food is reheated, it shall reach an internal temperature of **at least 165°F within 2 hours**. Any heated food left over at the end of the day is to be discarded.

3. Single service disposable dinnerware and utensils such as paper plates and plastic eating utensils shall be clean, dry, covered and stored at least six inches off of the floor.

4. Single service utensils and self-service food, including condiments (ketchup, sugar, etc.), shall be individually packaged or dispensed from an enclosed dispenser.

5. Canned and bottled beverages, except milk, may be chilled in ice. The ice must be continuously drained and may not be used later in a food product. Milk must be mechanically refrigerated.

6. Ice must be cubed or crushed and must be sealed in a bag at the point of manufacture. Because ice is food, it is to be stored and handled as food.

7. Store all chemicals separately from or below food and utensils.

COOKING TEMPERATURE CHART

FOOD ITEM	**TEMPERATURE**	**HOLD TIME** (after reaching required temperature)
Raw animal foods (unless listed below)	≥145°F	15 seconds
Pork, ostrich, emu, injected meats, ground meats, and eggs cooked and then held for service	≥155°F ≥150°F ≥145°F	15 seconds 1 minute 3 minutes
Poultry, stuffed fish, stuffed meat, stuffed pasta, stuffed poultry or stuffing containing meat, poultry, ostrich or emu	≥165°F	15 seconds
Whole beef roasts and corned beef roasts	130°F 140°F	121 minutes 12 minutes
Microwave cooking	165°F	2 minutes after cooking

D. DISHWASHING FACILITIES, PROCEDURES AND EQUIPMENT CLEANING

1. Only single service, disposable eating and drinking utensils may be used unless approved permanent dishwashing facilities are available.

2. a. Wash and sanitize utensils immediately prior to the event and as often as necessary during the event. Enough utensils must be supplied to ensure a clean one is available if one becomes contaminated.
   b. Utensils may be washed offsite (such as in a licensed facility) if approval is granted by the Department. If washing offsite, the clean utensils are to be suitably covered when transported.

3. Provide three basins for utensil washing and a space for air drying. The procedure for manual utensil washing is: (1) wash in warm, soapy water, (2) rinse in clear water, (3) sanitize for at least one minute in a sanitizing solution of sufficient concentration (e.g. one tablespoon of household liquid bleach per two gallons of water), and (4) allow to air dry. Towel drying is prohibited.

4. Cloths used to wipe equipment and counters shall be stored in a sanitizing solution between uses.

1. WASH in warm soapy water | **2. RINSE** in clear water | **3. SANITIZE** at least one minute in sanitizing solution | **4. AIR DRY** towel drying is prohibited

E. EQUIPMENT

1. Food service equipment shall be appropriately designed and sized for its use. Mechanical refrigeration shall be provided for potentially hazardous food such as meat, fish, poultry, milk and eggs if they are held for four hours or longer. Dry ice and cold packs may be substituted for mechanical refrigeration if the required temperatures are maintained and the food is held less than four hours. Foods kept cold with dry ice or cold packs must be discarded after four hours. Electricity shall be provided to the refrigeration units 24 hours a day when the special event food stand has been set up for service.

2. A thermometer is required for each refrigerator. A metal stem product thermometer (range 0° F to 220° F) is required for measuring potentially hazardous food temperatures.

3. Electric skillets, roasters, propane stoves and charcoal grills equipped with lids are acceptable for cooking food. **Crock pots or domestic slow cookers may not be used**.

4. To help provide customer safety and prevent possible contamination by customers, food preparation and cooking areas are to be protected by means of an impervious shield or by adequate separation distances between customers and food preparation activities.

5. Only commercial food quality utensils may be used. Items such as galvanized and soft plastic containers, wooden spoons, enamelware, paint brushes, etc. are not acceptable. Garbage bags and garbage containers cannot be used for food.

F. WATER SUPPLY

1. Water may **not** come from a residential well. It must be from an approved public water supply system. If water is not provided under pressure at the stand, it may be transported and stored in approved, cleanable, covered containers or nongalvanized beverage coolers containing spigots. The transport container, including the spigot, shall be washed and sanitized before use.

2. Water may **not** be supplied through a garden hose. Water must be supplied with a food-grade hose that is approved for drinking purposes and provided with an approved backflow prevention device. The hose must be flushed and sanitized before use. The water inlet must be protected from contamination and designed so a non-potable service connection cannot be made.

G. WASTE WATER AND GARBAGE DISPOSAL

1. Waste water shall be discharged into an approved sanitary sewer system or a holding tank. Waste shall be removed in an approved manner. Disposal by throwing or dumping the waste water on the ground is **not** permitted.

2. Trash and garbage shall be deposited and stored in a manner that will not create a nuisance. Garbage containing food waste, if stored overnight or for extended periods of time, shall be stored in tightly covered nonabsorbent containers.

H. LOCATION

The stand shall be located where it is not subject to flooding and is protected from possible contamination (e.g. toilets, animals, garbage). It shall be protected from windblown particulates. Activities shall cease in adverse weather unless the interior of the food stand is protected from windblown dust and debris.

I. CONSTRUCTION

1. **Floors.** The interior floor shall be constructed of concrete, asphalt, tight wood, or other similar cleanable material in good repair. Stands may be located on dirt, gravel or grass when covered with plywood, mats or duckboards, or other approved materials to control dust and mud.

2. **Surfaces.** Interior surfaces shall be finished with smooth, durable, nonabsorbent material that resists wear and can be easily cleaned. High gloss paint is the minimum acceptable finish.

J. SAFETY

1. Electrical service shall comply with the Minnesota Electrical Code Chapter 1315. Electrical lines should not be located in or near water.

2. All lights in the stand shall be shielded or enclosed to prevent and contain breakage. Lights used at night shall not attract flying insects.

3. Carbon dioxide and bottled gas cylinders are to be secured.

4. A fire extinguisher (2A 10BC rated) shall be present if required by the fire marshal.

5. Gas hook ups and service must comply with Minnesota Chapter 1346.